Gearing in the ancient world

M. J. T. Lewis

Gears were invented by the Greek mechanics of Alexandria in the third century B.C., were considerably developed by the great Archimedes, and saw wide use in the Roman world. They found two main applications: in heavy-duty machines such as mills and irrigation wheels, where they transmitted considerable power, and in small-scale water-clocks, calendrical instruments and automata which could be of extraordinary sophistication, incorporating the differential and perhaps the hypoid gear. They became the ancestors of all modern gearing.

Gears — if defined as toothed wheels for transmitting motion — have a venerable history. Their birthplace seems to have been Alexandria where the Ptolemies, the Greek kings of Egypt, set up the research institute called the Museum. In a ferment of inventive activity, especially in the third century B.C., its scholars not only thought up a host of basic mechanisms — water-lifting wheels, pumps, organs, water-clocks with moving parts, and perhaps the waterwheel itself — but indeed first formulated the laws of mechanics.

Their leading light was Ctesibius (fl. *ca* 270–230 B.C.). His writings are unfortunately lost, but we know a little about him from later authors such as Philo of Byzantium who was active in Alexandria a generation later, from Hero of Alexandria who worked in the second half of the first century A.D., and from Vitruvius (d. *ca* 25 B.C.) the Roman architect-engineer who wrote about 30 B.C. These three men provide the bulk of our limited written evidence for ancient gears. Of the relevant works of Hero (fl. 60 A.D.), though the *Pneumatics* and *Dioptra* exist in the original Greek, the *Mechanics* survives only in Arabic translation; so does Philo's *Pneumatics*. Illustrations are very few: little more than the diagrams in these books, which are much distorted by successive copying. Our third source is archaeological finds, relatively rare but of prime importance.

The Alexandrians, it seems, devised gears meshing in the same plane and at right angles, the rack and pinion, and some of the accompanying theory. Hero, for example, expounds the principle of gears for reduction, and describes an imaginary gear train whereby a force of four talents applied at one end balances a weight of a thousand talents at the other. He specifies six wheels with the correct numbers of teeth, but practical experience compels him to add that to lift the weight and to overcome the friction the input needs to be five talents [1]. The diagram for a similar exercise is shown in figure 1.

If the gear was born in Alexandria, it was much fostered in its youth by Archimedes of Syracuse (*ca* 287–212 B.C.), the greatest mathematician of the Greeks. Just as Ctesibius and his successors were sponsored by the Ptolemies, so was Archimedes by Hiero II, the ruler of Syracuse. Not much is known of his mechanical labours, since of the little that he wrote about them nothing has survived except an Arabic translation of a treatise on the water-clock. Yet it is clear that he did much to elaborate the simple gears of Alexandria, with whose engineers he was in close touch. The screw which moves a nut (or the equivalent) was perhaps already known; Archimedes' best-known mechanical discovery was a development of it, the worm gear driving a pinion. Hero describes with precision the geometry of shaping the teeth of the pinion to fit the angle of the helix [1]. As we shall see, it has recently been suggested that Archimedes was also responsible for the hypoid gear and the differential.

Origins

Nobody knows what inspired the earliest gears. Toothed wheels already existed in the form of ratchet wheels for holding a windlass against a load. These may go back to the beginnings of the crane, a Greek invention (*ca* 515 B.C.). A bronze example has been found of perhaps a century later, maybe from a windlass for hauling ships up a slipway [2]. Thereafter the ratchet was widely used on catapults. But the first toothed wheel for transmitting motion may have been a sprocket wheel driving a chain. This is attested by two machines described by Philo. One is a chain of buckets powered by a waterwheel; the other is a repeater catapult built in Rhodes by a certain Dionysius of Alexandria, who cannot be precisely identified but may very well have worked before 282 B.C. Both had polygonal drive wheels which are interpreted as having projecting

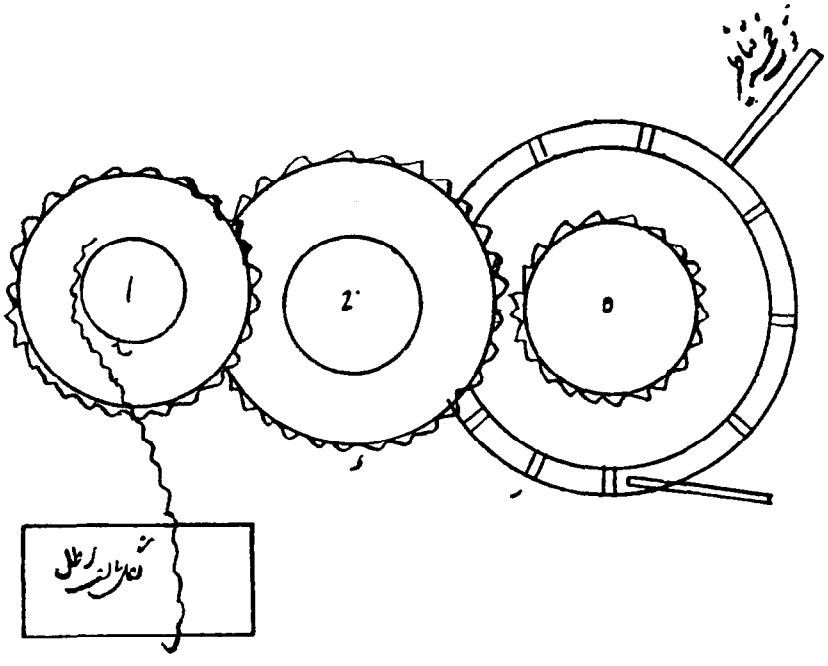

Figure 1 Hero's theoretical illustration of gear ratios, from Arabic translation of the *Mechanics* (British Library Addl. 23390, f.30v). The legend to right reads 'power five talents', and that to the left 'weight thousand pounds' (an error for talents). The text gives the ratios for the wheel diameters: left 1:5, centre (small pinion should be toothed) 1:5, right 1:8. (By permission of the British Library.)

M. J. T. Lewis, M.A., Ph.D., F.S.A.

Read classics at Cambridge University, and is now Senior Lecturer in Industrial Archaeology in the Department of Adult Education, University of Hull. His interests embrace the whole history of technology, concentrating mainly on Greek and Roman engineering.

Endeavour, New Series, Volume 17, No. 3, 1993.
0160-9327/93 $6.00 + 0.00.
©1993 Pergamon Press Ltd. Printed in Great Britain.

lugs for the chain to grip on. A third example of sprocket wheel, turning a chain of buckets to empty the bilge, was found in a Roman ship sunk in Lake Nemi in Italy [3].

In all these cases, however, the purpose was to drive the chain, not a second sprocket. But perhaps somebody realised that two such sprocket wheels could be made to mesh with each other. The *Mechanical Problems*, probably written by Aristotle's successor Strato (d. *ca* 268 B.C.), mentions how worshippers in Egyptian temples could purify themselves by turning a bronze wheel that moved a second wheel in the opposite direction and a third in the same direction. The text, which refers to a date perhaps before 287 B.C., does not say whether these wheels were smooth or toothed [1]. But by the mid-third century B.C. gearing was unquestionably established: by no means a commonplace at first, but emphatically in the repertoire of the progressive engineer.

Henceforth, ancient gear wheels fall into two major categories. One type was large (up to a metre or even two in diameter — it was no doubt quite crude), was made essentially of wood, and transmitted the considerable amount of power needed in mill-work — not only mills themselves but other large-scale machinery. The other sort is mathematical gearing, where the exact number of teeth to each wheel is critical. The scale is small, the work necessarily fine, and the material bronze or occasionally brass. The teeth, cut by file, are triangular: while this is not the most efficient shape, it is adequate for the very low torque.

Mill-work

Mill-work gearing, much the most common, was found in three main kinds of machine. The first was the irrigation *saqiya*, whereby animals (usually oxen) turned a long arm attached to a horizontal gear. This drove a vertical gear, on the axle of which was either a wheel with buckets or compartments on the rim, or more often a drum with a chain of pots for lifting water from a deeper source. The *saqiya* was recently widespread in the Middle East and especially in Egypt, though numbers are rapidly dwindling. Ancient examples were evidently very similar, with rough-hewn teeth projecting radially from the wheels. Such details as 'a large wheel with 36 teeth' are recorded in Egyptian papyri, our main source of knowledge, which suggest that *saqiyas* became particularly common from about 300 A.D. Although the earliest known, of *ca* 100 B.C., supplied water to baths at Cosa in Etruria, it seems likely that its origins did lie in Egypt, where it certainly existed by the mid-first century B.C. [4]. The identical layout was proposed by an anonymous Roman author of the late fourth century A.D. for a naval paddleship, with three teams of oxen in the hold turning six paddle wheels. Whether this revolutionary vessel was ever built we cannot tell, but the same idea has been applied to ferry-boats and tugs in more recent times [4].

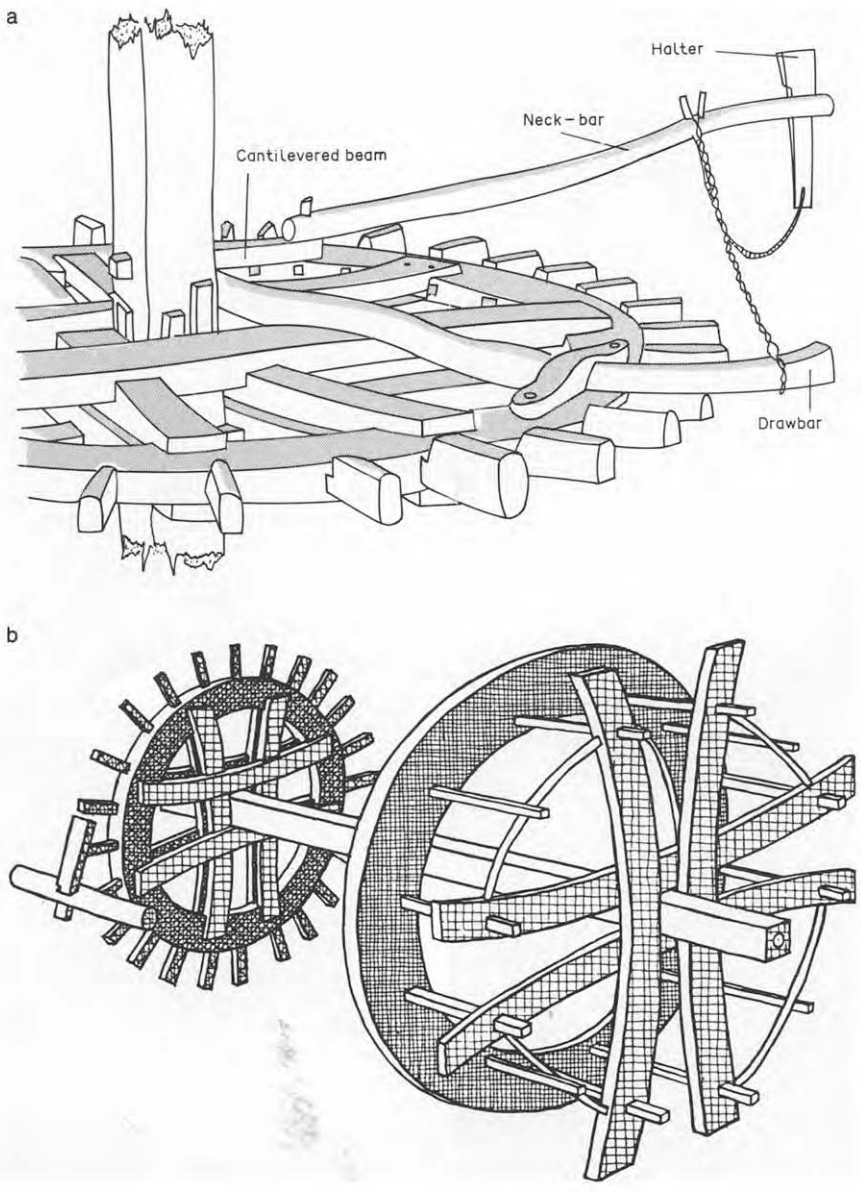

Figure 2 Details of a relatively recent *saqiya* in Egypt: (a) neckbar and driving gear; (b) driven gear and bucket wheel. Ancient *saqiyas* were evidently very similar. (After Thorkild Schiøler, 'Roman and Islamic Water-lifting Wheels', Odense: University Press, **29**, 1973, courtesy Dr T. Schiøler.)

Secondly, the vertical waterwheel was apparently known to Philo in the third century B.C., although it is debated whether these parts of his book are genuine. But it is not until late in the first century B.C. that firm evidence emerges of such waterwheels driving millstones, an arrangement that is the precise reverse of the *saqiya* and the paddleship. Vitruvius describes an undershot wheel powering the stones through right-angled gears, and his contemporary Antipater of Thessalonika gives a poetic account of a geared mill which seems to be overshot [4]. Though later literature says little about them, the sites of more and more watermills are now being excavated. It is clear that they were nothing like so rare as was once thought, and that their numbers began to blossom in the second century A.D. While no machinery survives, in almost every case the waterwheel was vertical, and occasionally the necessary gears have left wear marks where they rubbed on the masonry. The ultimate was reached in the third century with a full-blown milling factory at Barbegal in southern France, where the water supply divided in two, each feeding a series of eight waterwheels in descending series. In contrast, the ungeared watermill with a horizontal wheel was evidently a rarity, except perhaps in Palestine and North Africa [5].

The position of geared mills powered by animals is less clear-cut. The well-known 'Pompeian' or donkey mill with a hopper-shaped runner stone was driven direct, without gears. But the north-western provinces of the Roman Empire have yielded a number of sizeable disc-shaped millstones which, it is argued, came not from watermills but from geared animal mills. Their existence is rather confirmed by Diocletian's Price Edict of A.D. 301, which lays down the price of a hand quern at 250 *denarii*, of a donkey mill (ungeared) at 1250, of a horse-mill (presumably with gears) at 1500, and

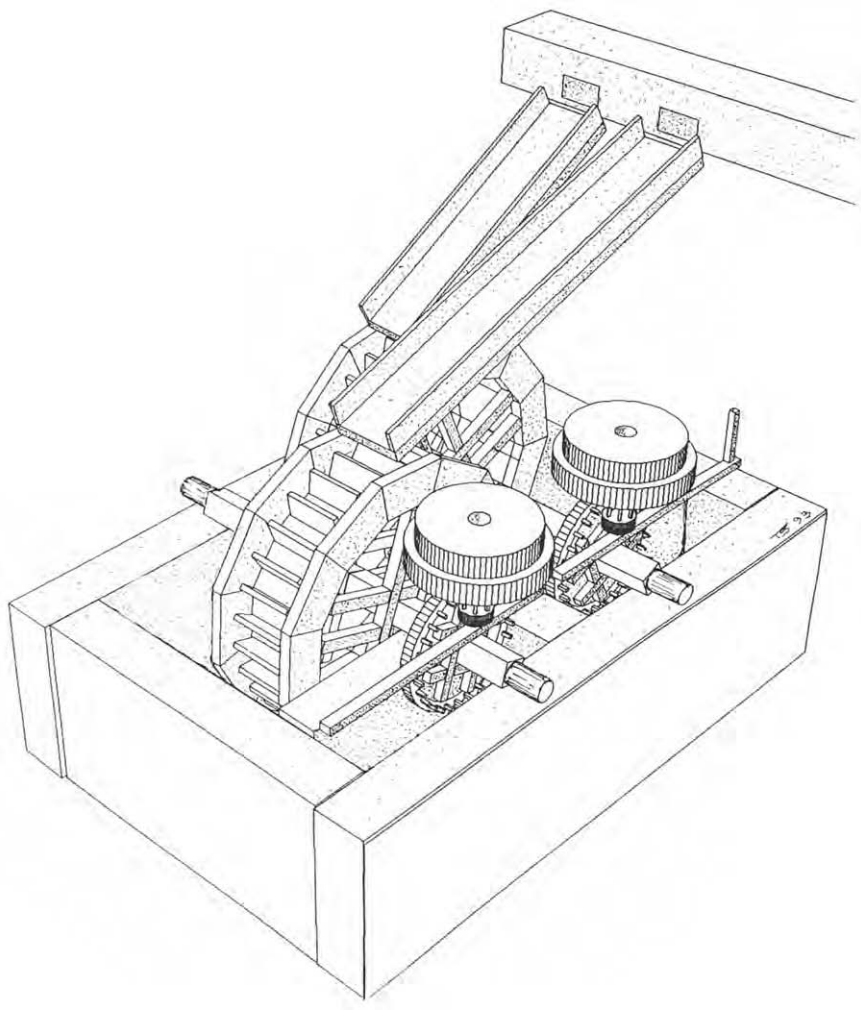

Figure 3 Reconstruction from archaeological evidence of Roman watermill in the basement of the Baths of Caracalla in Rome, third century A.D. (Courtesy Dr T. Schiøler.)

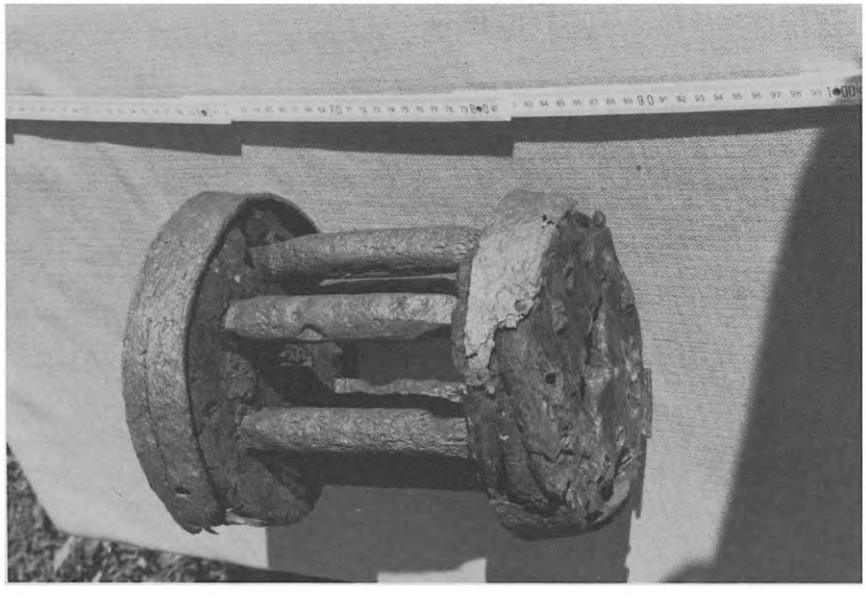

Figure 4 Lantern pinion from Zugmantel, Germany, second century A.D. The iron-strapped wooden discs are 200 mm in diameter, the six staves are of iron. (Saalburgmuseum, Bad Homburg v.d.H., inventory number ZM 3747.)

of a watermill at 2000. Most notably, an actual gear wheel on an iron spindle for driving a millstone was recovered from a second-century well in the fort of Zugmantel in Germany [6]. In the absence of any nearby streams suitable for powering a watermill, it seems that this gear came from an animal mill, although the layout of its drive can only be guessed.

Two other examples fall into the category of mill-work. Philo describes a curious box-pump, perhaps only an armchair design, operated by a wooden rack and pinion [4]. And Archimedes (*ca* 287–212 B.C.), in a demonstration of basic mechanics, hauled a large fully-laden merchant ship along dry land by means of a worm and pinion and other reducing mechanisms. In the circumstances, these must have been sizeable heavy-duty gears too [7].

Mathematical gearing

The earliest application of fine gearing was to clocks. Until the mediaeval invention of the weight drive and the escapement, the working of a clock depended on water flowing in or out of a container at, ideally, a constant rate. In the simplest versions, that was all. But for more elaborate purposes like marking the hours visually or audibly (for instance by a display of moving puppets, as in the cuckoo clock and more complex examples) a drive was needed. Ctesibius was the first to supply it, in the form of a float carrying a vertical rack, which as it rose turned a pinion to power the various displays [1]. Rather later, Archimedes produced a water-clock with right-angle gears that every hour caused a human face to roll its eyes, and a bird to drop a ball from its beak on to a cymbal. To achieve this intermittent effect, Archimedes probably used widely-spaced teeth on the driving gear. Such principles long remained in use: an extremely elaborate clock built at Gaza around 500 A.D. apparently belonged to this tradition, although the description tells us nothing of the internal mechanism [8]. Nonetheless, most ancient clocks were driven by cords rather than gears.

Of this kind was the standard anaphoric clock which showed the position of the sun not only in the sky — that is, the time — but also in the zodiac. This introduces us to a related but distinct family of machines which displayed yet more heavenly phenomena for astronomical and astrological purposes. For any date, past, present or future, to which they were set by hand, they automatically indicated the position in the heavens of the Sun, Moon, and sometimes planets. Given the complexity of the motions of the heavenly bodies, the gearing had to be highly sophisticated. A few rather vague accounts speak of mechanised globes of this kind constructed by Archimedes (who wrote a book about them, now regrettably lost), and reveal that they were still being made in the first century B.C. Their implications, however, were little understood until Derek de Solla Price made a revolutionary analysis of the Antikythera mechanism.

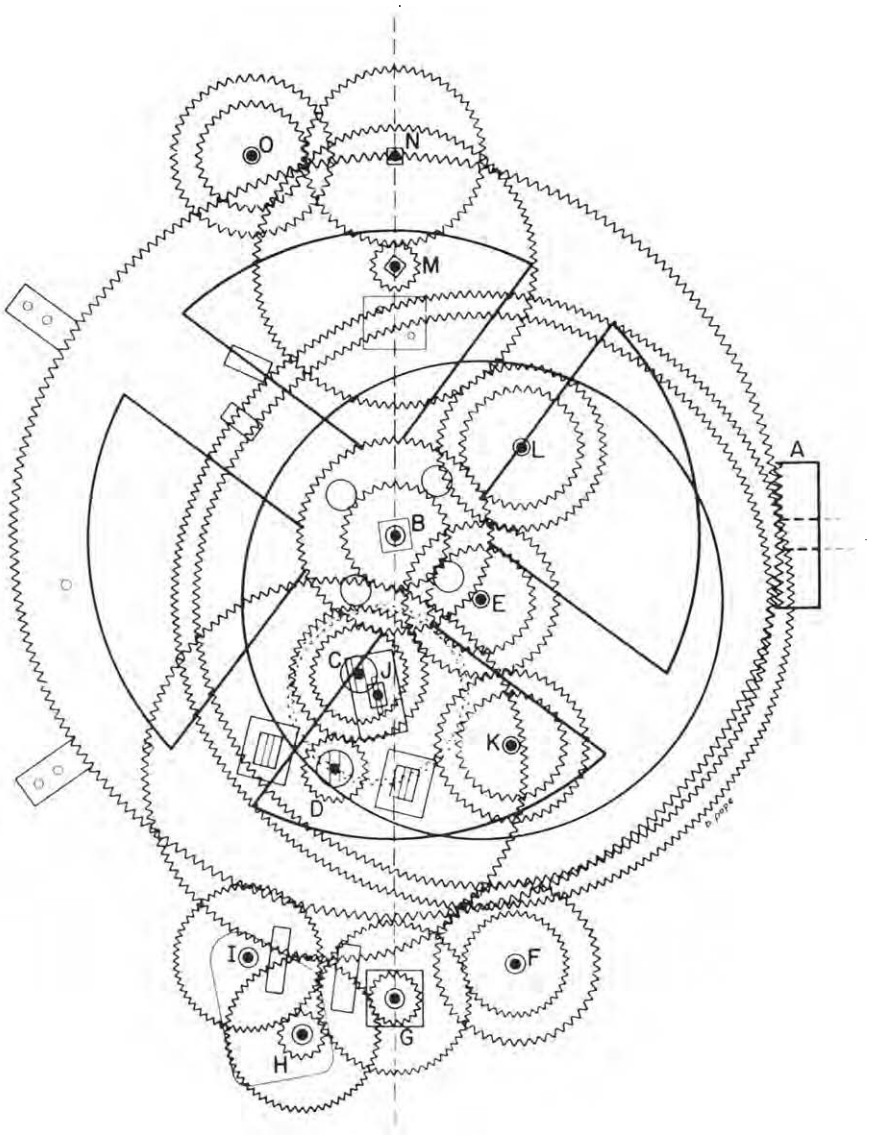

Figure 5 Reconstructed composite plan of all the gears in the Antikythera mechanism. The largest wheel has 225 teeth and a diameter of 126 mm. (After Price [9], courtesy American Philosophical Society.)



Figure 6 Fragments of Byzantine sundial-calendar, fifth or sixth century A.D. Brass gear wheel 52 mm diameter, with 59 teeth. (Collection Science Museum, London, inv. 1983–1393.)

Found in 1901 in a corroded and fragmentary state in an Aegean shipwreck, and now in the National Archaeological Museum in Athens, this proved to be an astronomical calculator made, it seems, in 87 B.C. and quite possibly in Rhodes. Contained in a case smaller than a shoe-box, it comprised at least 30 gear wheels. The smallest had 15 teeth, the largest 225, most of them at a pitch of about 1.5 mm and cut to an accuracy of ±15 minutes of arc. The mechanism was set to the required date by a hand wheel turning a contrate gear, the rest of the gears having a straight mesh. Dials showed the sign of the zodiac, the month, the Moon's phases and position, the Sun's position, and perhaps other things too. A differential gear — the earliest known — performed the otherwise impossible task of mediating between the motions of the Sun and the Moon to indicate both the synodic month of about 29½ days and the sidereal month of about 27⅓ days [9]. Since Archimedes' globes, which displayed the same phenomena, were clearly ancestral to the Antikythera mechanism, it is not unreasonable to suppose that he invented the differential and used it for the same purpose. The tradition, shorn perhaps of some of its sophistications, continued into Byzantine times: the sundial-calendar now in London, a smaller and simpler machine, dates to the fifth or sixth century A.D. [10, 11].

Another device where mathematical gearing saw service was the odometer for measuring distances by road. Hero has an account of one working mainly through worm gears. Vitruvius describes another in which there are two pairs of gears, each consisting of a single-toothed wheel driving one with 400 teeth. Since nobody could understand how these could both be robust enough for use and fit into a vehicle of reasonable size, it was dismissed as a theoretical exercise until André Sleeswyk explained how a skew or hypoid gear could do the job. He moreover suggested, with great plausibility, that it was invented by Archimedes for positioning the milestones on the Via Appia in southern Italy in about 240 B.C. Like his clock, it both employed an intermittent gear drive and, to indicate the miles, dropped a ball into a basin [8]. Archimedes was a stickler for accuracy, and we have seen that he may have devised the differential. It is therefore even conceivable that he applied it to an improved version of the odometer, to reduce the inaccuracies that would arise as the vehicle turned corners [3].

This possibility links up with another recent suggestion. One of the best-known Chinese machines was the chariot surmounted by a figure, arm outstretched, that always pointed south, no matter which way the chariot might turn. It is first recorded in the second or third century A.D. It now seems that a similar pleasure-carriage existed at Rome in the reign of the emperor Commodus (180–192 A.D.), adorned, instead of a south-pointing figure, with passenger seats that would face away from the sun or into the breeze. As with the

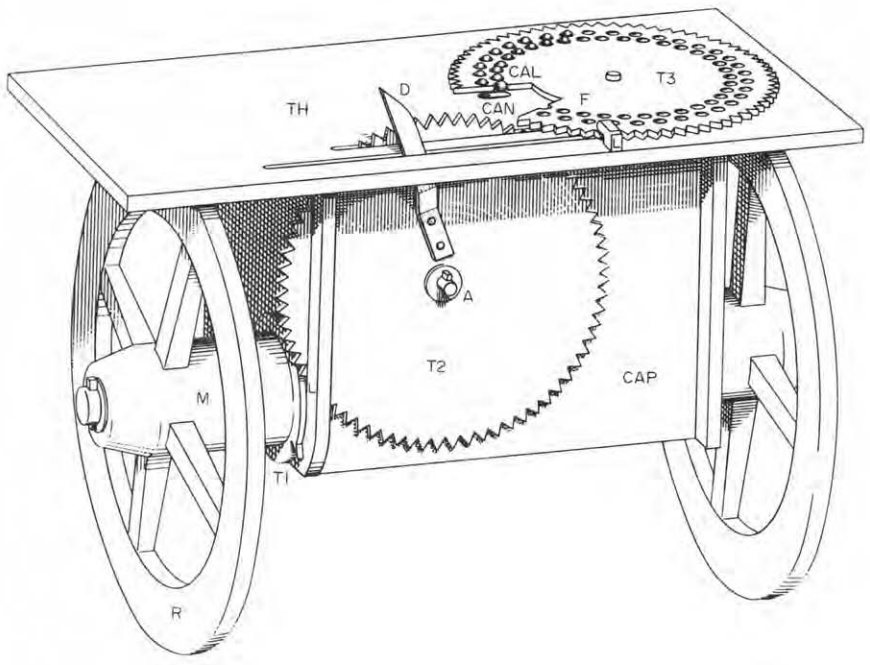

Figure 7 Reconstruction of hypoid gearing on odometer described by Vitruvius. Each revolution of wheel T1 advances T2 by one tooth; likewise T2 advances T3. At every revolution of T3 a ball drops through the hole marked CAN. For clarity, T2 and T3 are drawn with 72 teeth instead of 400. (After Sleeswyk [8], courtesy Professor A. W. Sleeswyk.)

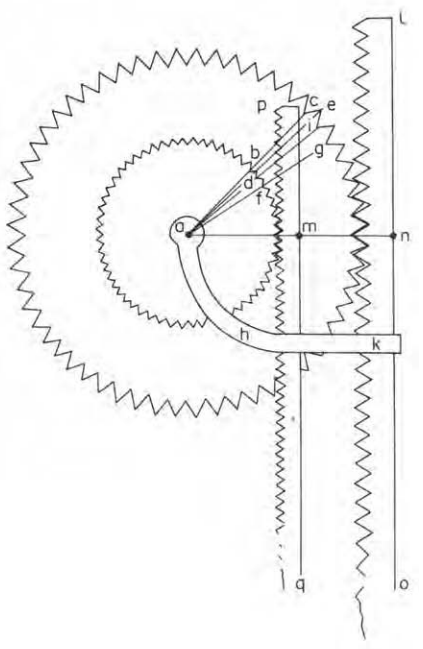

Figure 8 Reconstruction of Hero's pantograph. (After 'Herons von Alexandria Mechanik und Katoptrik', L. Nix and W. Schmidt (eds), Leipzig: Teubner, figure 8, 1900.)

Chinese vehicles, a differential gear is by far the most satisfactory way of achieving the purpose. This raises the intriguing speculation — and it can be no more — that Commodus' vehicle descended from a prototype built by Archimedes for his patron Hiero [12].

Relatively fine gearing, too, was needed in a number of other devices which appear in Hero's pages. There is a geared pantograph for enlarging or reducing drawings [1]. There are delicate worm gears for adjusting the sighting head of his *dioptra*, an elementary theodolite [1]. There are simple but necessarily small racks and right-angle gears in several of his automata [13] and in one of Philo's [14]. Rather more sturdy are a couple of surviving Roman door locks: the key rotated a pinion, which moved vertical and horizontal racks to shoot the bolts [12]. Heavier still, though hardly in the category of mill-work, would be the worm and pinion on a traction bed for setting broken bones, invented by the surgeon Nymphodorus in the second or first century B.C. [1]. So too in an animated statue, very probably activated by the road wheels, that sat in a carriage in a fantastic procession in Alexandria in the 270s B.C. [12]. This brings us back full circle to Ctesibius, for in all likelihood he was responsible for it.

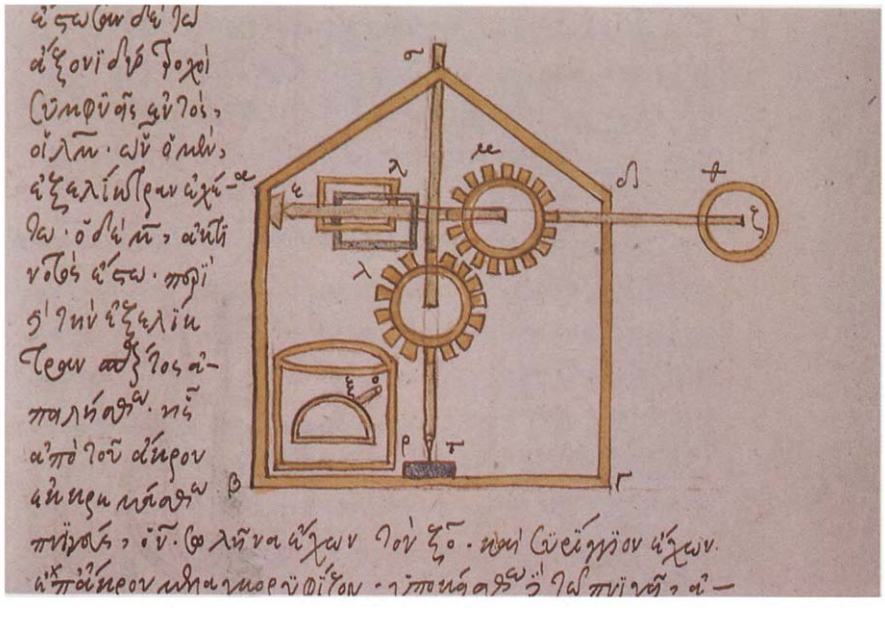

Figure 9 Hero's whistling bird, from the *Pneumatics* (British Library, Burney **108**, f. 77). When the wheel on the right is rotated, it turns a bird (not shown) on top of the vertical spindle by means of right-angle gears, and lowers an inverted bowl into a tank of water, the trapped air escaping through a whistle. (By permission of the British Library.)

Chinese gearing

The Greeks and Romans, then, applied the gear wheel in many forms and to many machines. The basic ideas evolved in Alexandria in the early third century B.C.; Archimedes enlarged the repertoire in the second half of the century; heavy gears for mill-work emerged (as the evidence stands) a century later. Was this all their own work, or did they owe it to others? The only possible source would be China. Here, however, gears appear rather later than in the West. Sprocket wheels for water-lifting are not attested before the first century A.D., nor gear wheels before the third, while the *saqiya* was unknown. In mathematical gearing, the odometer existed from the third century A.D., while a south-pointing chariot, and a planetary sphere which sounds remarkably similar to Archimedes', are both attributed to Chang Hêng in about 125 A.D. The only earlier examples so far recorded are a number of very small bronze gears and ratchets found in tombs and dating from around 200 B.C. to 50 A.D. They include, extraordinarily, what look like chevron or double-helical gear wheels of tiny size. All seem too small and too early to belong, as has been suggested, to windlasses for drawing crossbows, and we have no idea what they were for [15]. In the present state of our understanding, then, either gearing was invented quite independently in China and in the Greek world, or the idea was transmitted from West to East.

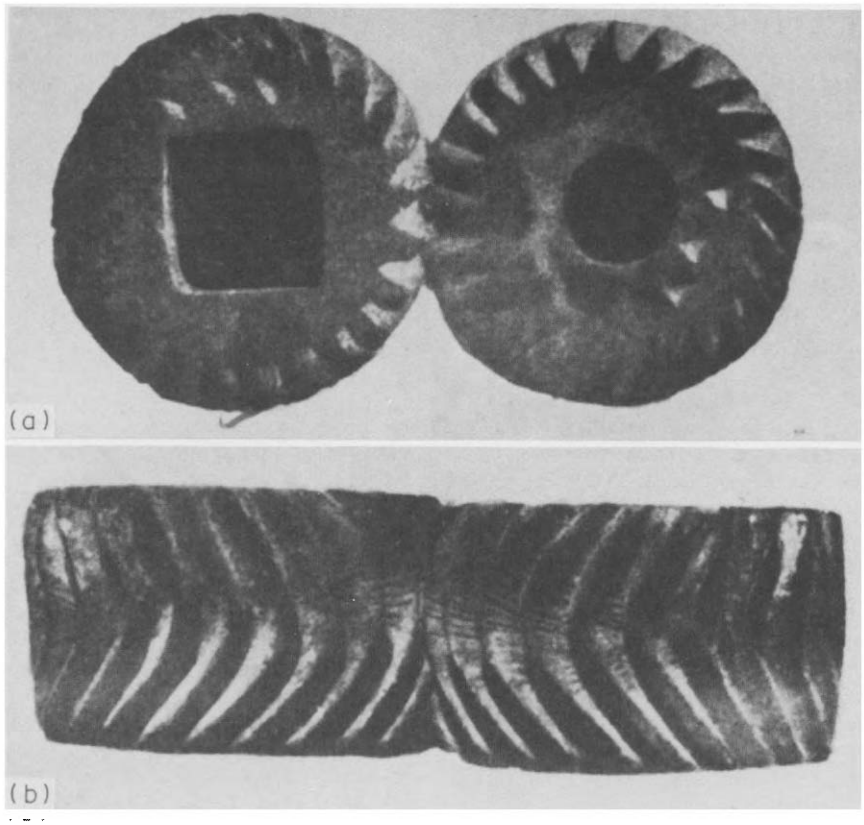

Figure 10 Chevron-toothed gear wheels from tomb in Shensi, China, *ca* 50 A.D. Diameter 15 mm, width 10 mm, 24 teeth. (After Needham [15], courtesy Needham Research Institute, Cambridge.)

In the West, the main kinds of mill-work survived in continuous use into the Middle Ages. The art of mathematical gear-making and of automata passed from Byzantium to Islam, and from both it returned to the West where the true mechanical clock evolved in the thirteenth and fourteenth centuries. The two traditions contributed immeasurably to the final development of gearing, based ever more on scientific design, which took place in the industrial revolution and thereafter. Although the picture is in places uncertain and no doubt very incomplete, modern gears can trace their descent in unbroken succession from Greek ancestors.

References

[1] Drachmann, A. G. In 'The Mechanical Technology of Greek and Roman Antiquity', Munksgaard, Copenhagen, Madison and London, 1963.

[2] Kenny, E. André. In 'The Ancient Docks on the Promontory of Sunion', *Ann. British School at Athens*, **42**, 196, 1947.

[3] Foley, Vernard *et al.* In 'The Origin of Gearing', *History of Technology*, **7**, 101–129, 1982.

[4] Oleson, J. P. In 'Greek and Roman Mechanical Water-lifting Devices: the History of a Technology', University of Toronto Press, Toronto, Buffalo and London, 1984.

[5] Wikander, Ö. Water-power and technical progress in classical antiquity. In 'Ancient Technology', pp. 68–84, Tekniikan Museo, Helsinki, 1990.

[6] Moritz, L. A. In 'Grain-mills and Flour in Classical Antiquity', Oxford University Press, Oxford, pp. 123–128, 1958.

[7] Drachmann, A. G. The crank in Graeco-Roman antiquity. In 'Changing Perspectives in the History of Science: Essays in Honour of Joseph Needham' (Eds M. Teich and R. M. Young), pp. 48–51, Heinemann, London, 1973.

[8] Sleeswyk, A. W. Archimedes' odometer and waterclock. In 'Ancient Technology', *op. cit.* in [5], 28–34.

[9] Price, D. J. de S. 'Gears from the Greeks; the Antikythera mechanism — a calendar computer from *ca.* 80 BC'. *Trans. Am. Phil. Soc.*, **64**(7), 1974.

[10] Field, J. V. and Wright, M. T. Gears from the Byzantines: a portable sundial with calendrical gearing. *Ann. Sci.*, **42**, 1985. (Reprinted in Field, J. V., Hill, D. R. and Wright, M. T. 'Byzantine and Arabic Mathematical Gearing'. Science Museum, London, 1985.)

[11] Field, J. V. and Wright, M. T. The early history of mathematical gearing. *Endeavour, New Series*, **9**, 198–203, 1985.

[12] Lewis, Michael J. T. The south-pointing chariot in Rome: gearing in China and the West. *Hist. Technol.*, **14**, 77–99, 1992.

[13] 'Herons von Alexandria Druckwerke und Automatentheater', Greek text edited with German translation by W. Schmidt, Teubner, Leipzig, 1899.

[14] Le Livre des appareils pneumatiques et des machines hydrauliques de Philon de Byzance, Arabic text edited with French translation by B. Carra de Vaux, *Academie des Inscriptions et des Belles Lettres: Notices et extraits des mss. de la Bibliothèque nationale, Paris*, **38**(1), 170–171, 1903.

[15] Needham, J. 'Science and Civilisation in China. Vol. 4: Physics and Physical Technology. Part II: Mechanical Engineering', Cambridge University Press, Cambridge, 1965.